DSHG series solenoid pilot operated directional valves are solenoid pilot operated spool type valves. This series are used to control the start, stop and direction of flow.

DHG series hydraulic operated directional valves can be used to change the direction of hydraulic oil by moving the main spool when the valve receives a hydraulic signal from the pilot hydraulic oil.

Technical specification

Model			DSHG-04	DSHG-06	DSHG-10
Max.flow rate (l/min)			300	500	1100
Working pressure (MPa)	A,B,P port		31.5		
	T port	External drain	25		
		Internal drain	16(DC) 10(AC)		
	Y port	External control	16(DC) 10(AC)		
Max. operating pressure (MPa)			25		
Weight (kgs)	Pilot valve with single solenoid		Plug-in connector:1.5 Wire box: 1.8		
	Pilot valve with double solenoids		Plug-in connector:2.2 Wire box: 2.5		
	DHG valve		7.3	16.5	39.5

Ordering details

DSH	G	06	3C2	ET	A240	LW	AB	K
Sort	Mounting type	Nominal size	symbols	Oil control	Input voltage	Connector type	Stroke adjustment	Additional knob
DSH: Solenoid pilot operated directional valve DH: Hydraulic operated directional valve	Subplate mounting	04:NG16 Cetop7 06:NG25 Cetop8 10:NG32 Cetop10	See symbols list	See oil control list	See voltage list	LW: Wire box with light DL:Plug-in connector with light	No code: Standard AB: Both sides A: A side B: B side	No code: Omit K: With knob

Voltage list

A240	AC240/60HZ, AC220/50HZ
A220	AC220/60HZ, AC220/50HZ
A120	AC120/60HZ, AC110/50HZ
A110	AC110/60HZ, AC100/50HZ
R240	AC240/60HZ, AC220/50HZ
R220	AC220/60HZ, AC220/50HZ
R120	AC120/60HZ, AC110/50HZ
R110	AC110/60HZ, AC100/50HZ
D24	DC24
D12	DC12

Oil control list

No code	Internal control internal drain
E	External control internal drain
T	Internal control external drain
ET	External control external drain

www.Lahaghi.com

Symbols list

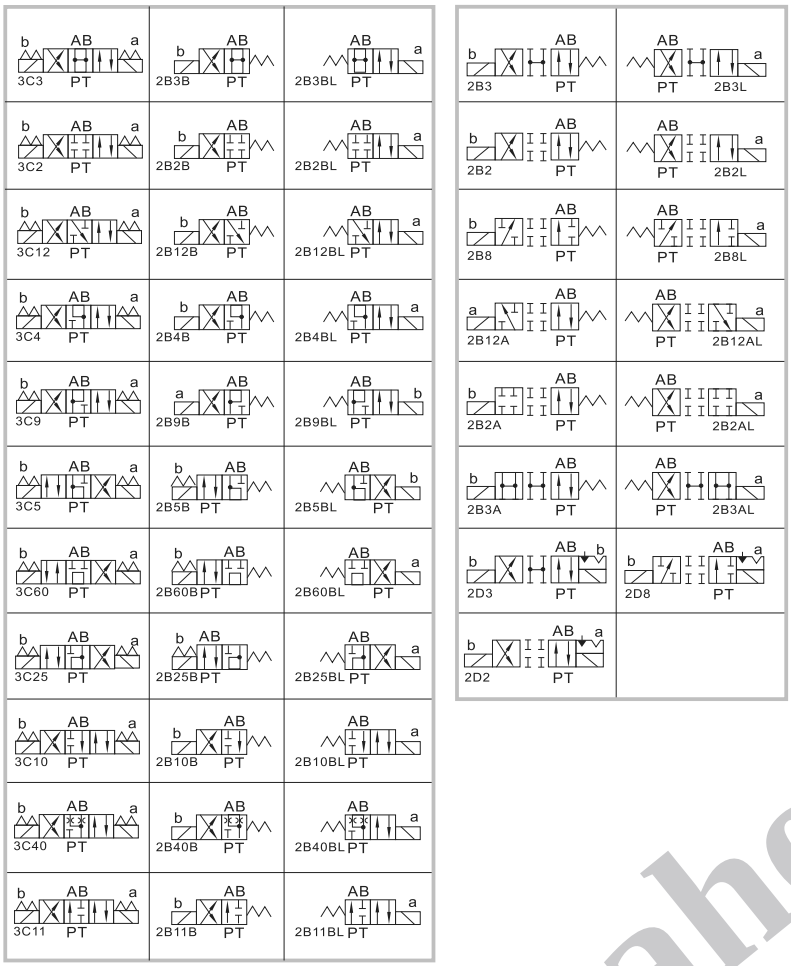

Mounting dimensions

Unit: mm

DSHG-04

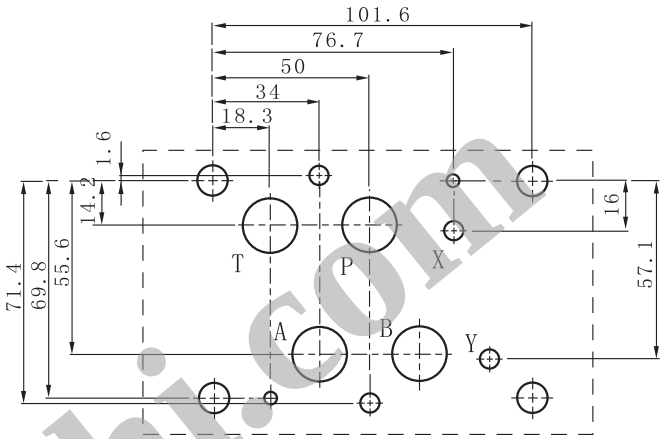

DSHG-10

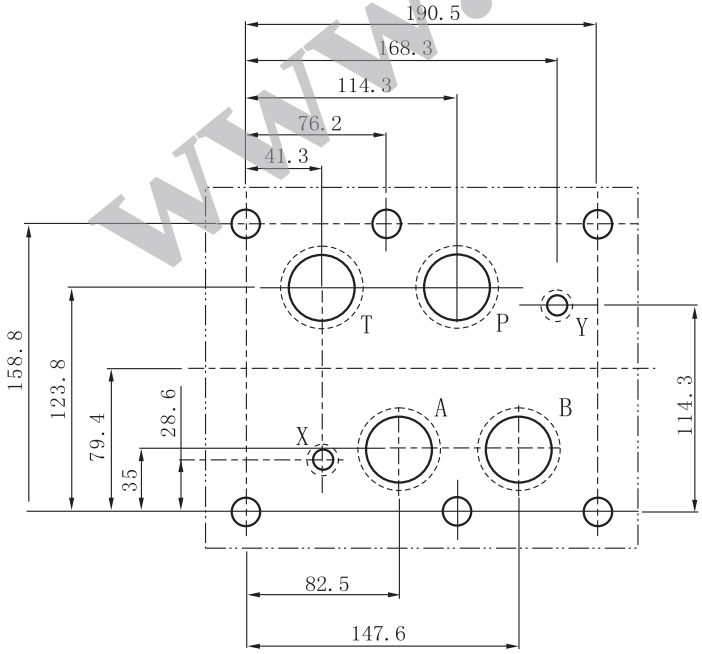

DSHG-06

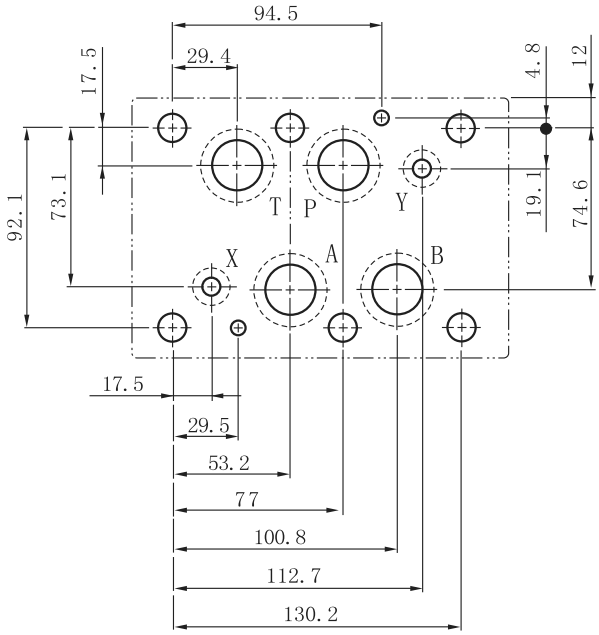

www.Laheghi.com

Dimensions

Unit: mm

DSHG-04- ＊-DL

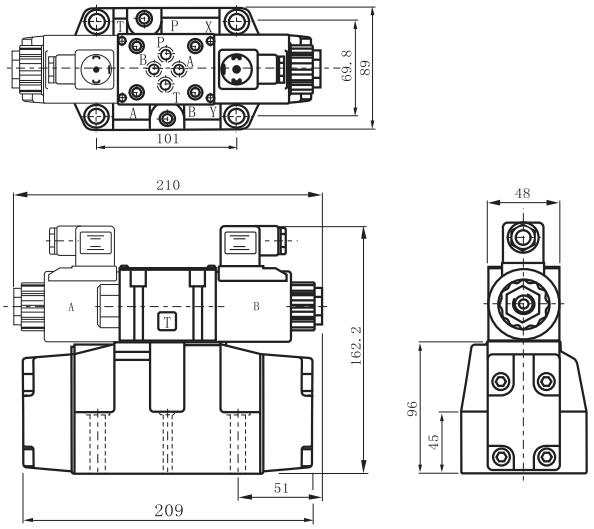

DSHG-04- ＊-LW

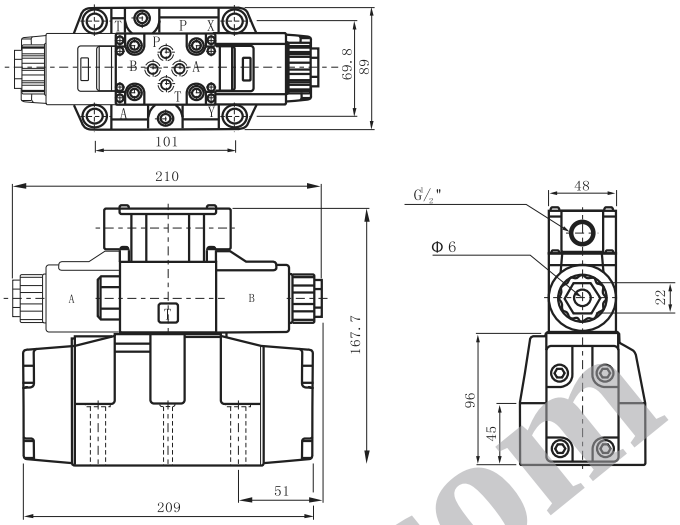

DSHG-06- ＊-DL

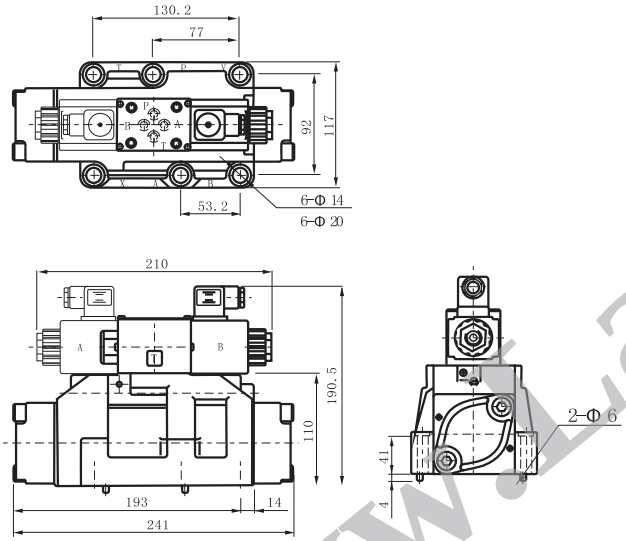

DSHG-06- ＊-LW

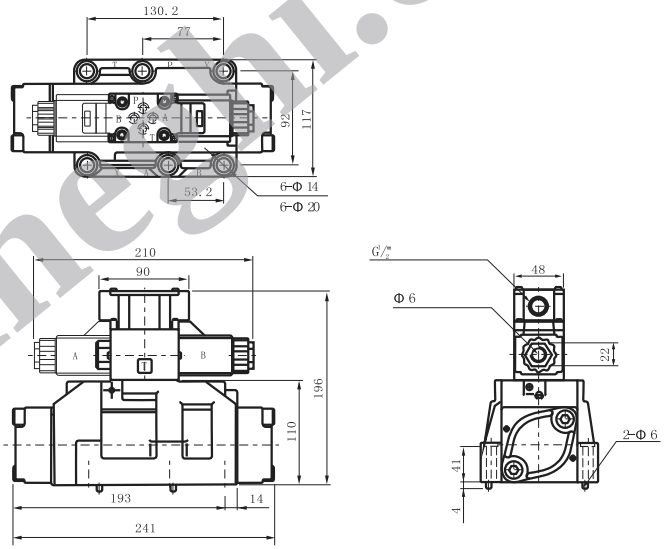

DSHG-10- ＊-DL

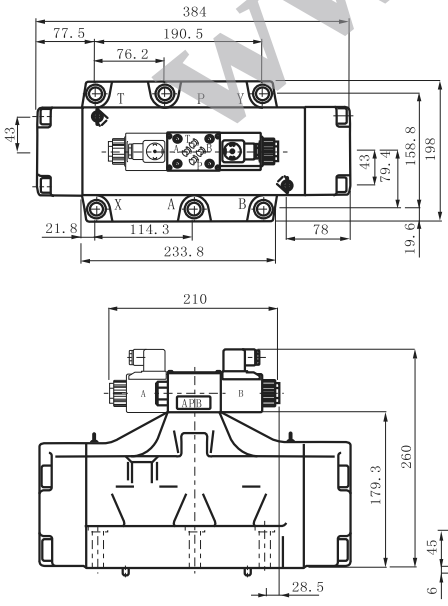

DSHG-10- ＊-LW

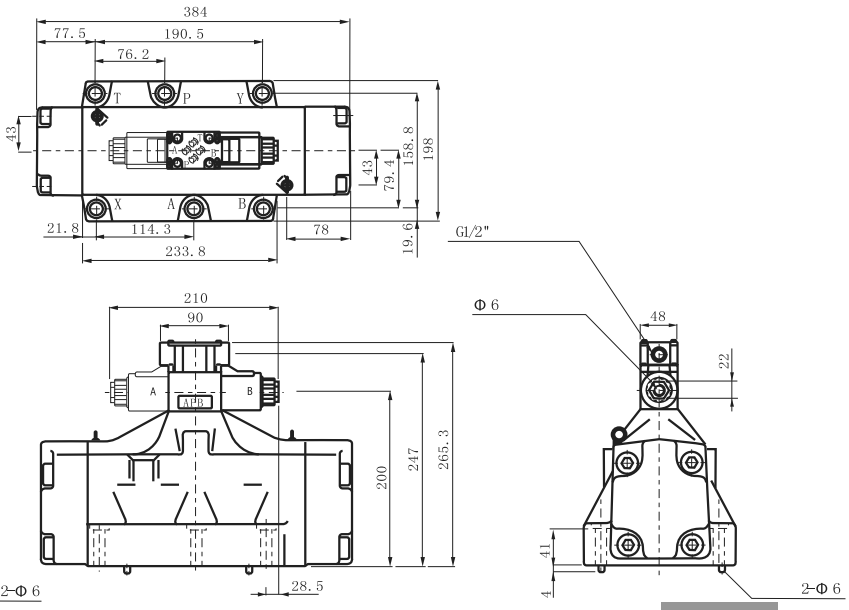

www.laheshi.com